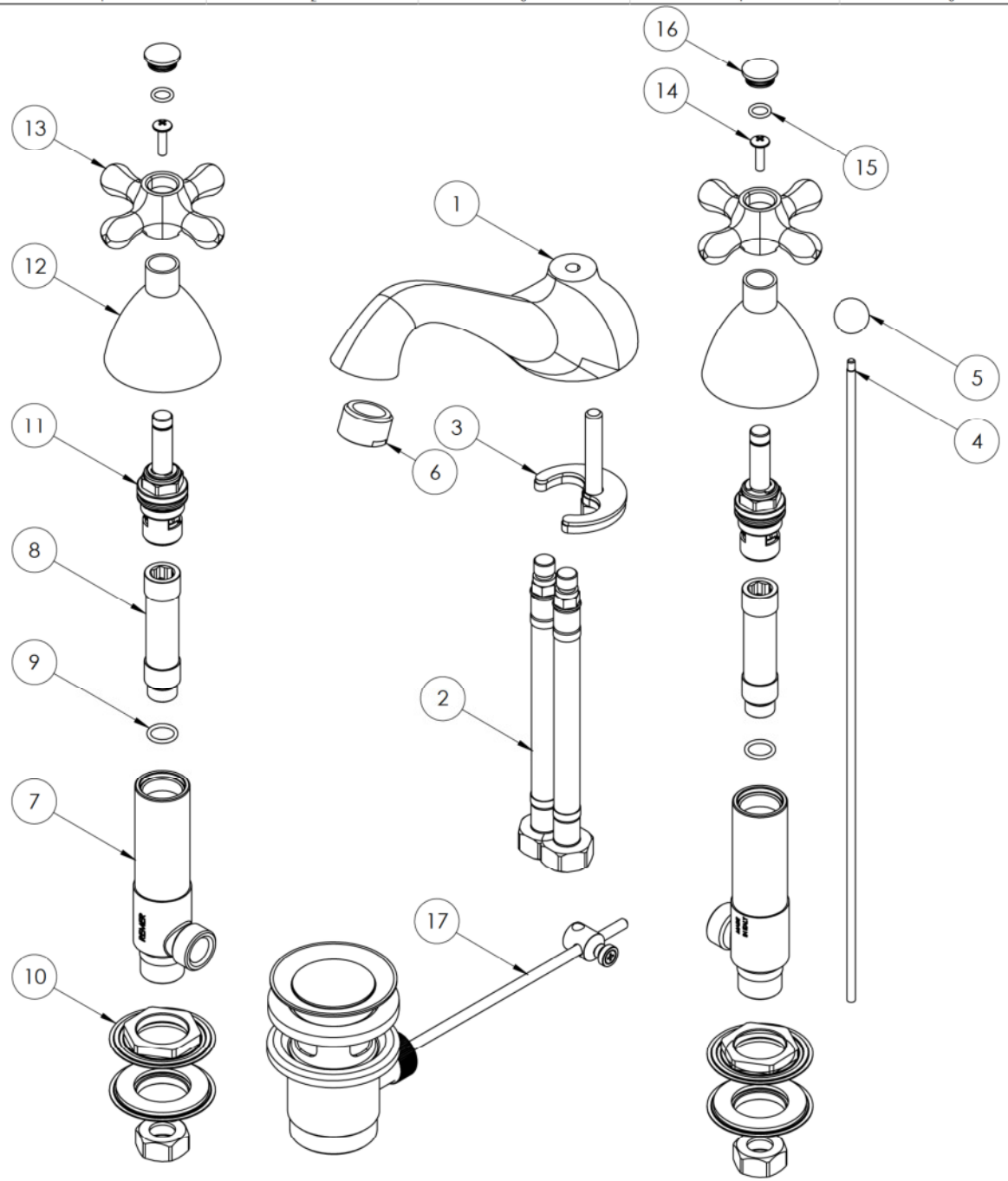

Num. articolo	cod. REMER	cod. DANIEL
1	BO11X	CR5003BORE
2	FL10812F16	FL10812F16
3	FISK10	FIS605
4	AS4	ASELICR4
5	POARTE	POARTE
6	83A	A803CR
7	PL11XT	PIL5003
8	SEPL11XT	SEPIL5003
9	OR1111178	OR1111178
10	FIS11LI	5003CONF
11	A853DX	A850DX
12	CAPREV	CAPREV
13	9200REV	9200REV
14	VT414OT	VT8630
15	ORPLREV	ORPLREV
16	PLREV	PLREV
17	95L80	95L80

Data: **31/07/2024**

Cod. : 93 910 02

Apice A